Harvest the Sunshine

DEEP BLUE 4.0 X

Mono

435W n-type Bifacial Double Glass High Efficiency Mono Module JAM54D40 410-435/GB Series

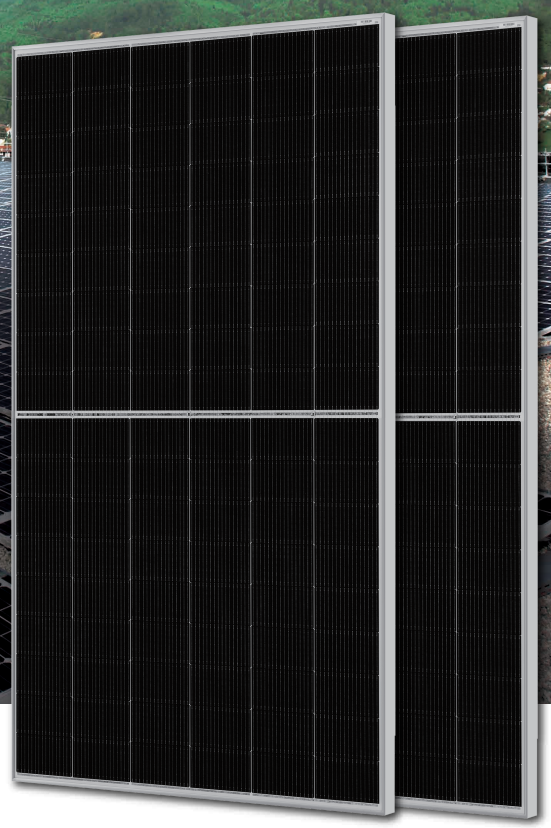

Introduction

Powered by the latest SMBB n-type solar cell and half-cell configuration, these modules have higher output power, lower LID, better weak illumination response, and better temperature coefficient.

- Higher power generation better LCOE
- n-type with very Lower LID
- Better weak illumination response
- Better Temperature Coefficient

Superior Warranty

- 12-year product warranty
- 30-year linear power output warranty

1% 1st-year Degradation

0.4% Annual Degradation Over 30 years

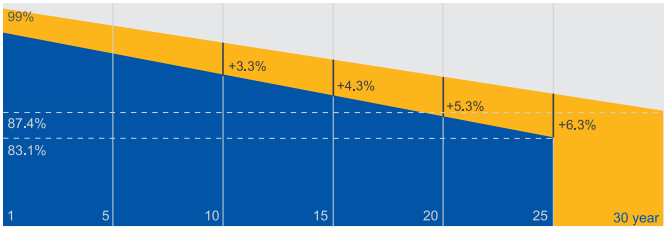

- n-type Bifacial Double Glass Module Linear Performance Warranty
- Standard Module Linear Performance Warranty

Comprehensive Certificates

- IEC 61215, IEC 61730
- ISO 9001: 2015 Quality management systems
- ISO 14001: 2015 Environmental management systems
- ISO 45001: 2018 Occupational health and safety management systems
- IEC 62941: 2019 Terrestrial photovoltaic (PV) modules - Quality system for PV module manufacturing

JA SOLAR

www.jasolar.com

Specifications subject to technical changes and tests.
JA Solar reserves the right of final interpretation.

JAM54D40 410-435/GB Series

MECHANICAL DIAGRAMS

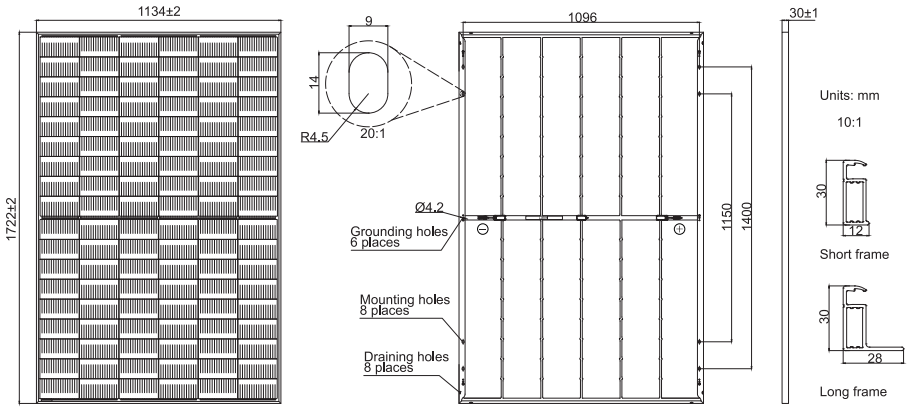

Remark: customized frame color and cable length available upon request

SPECIFICATIONS

Cell	Mono-16BB
Weight	21.5kg
Dimensions	1722±2mm×1134±2mm×30±1mm
Cable Cross Section Size	4mm²（IEC), 12 AWG(UL)
No. of cells	108(6×18)
Junction Box	IP68, 3 diodes
Connector	QC 4.10-351/ MC4-EVO2A
Cable Length (Including Connector)	Portrait: 200mm(+)/300mm(-); 800mm(+)/800mm(-)(Leapfrog) Landscape: 1100mm(+)/1100mm(-)
Front Glass/Back Glass	1.6mm/1.6mm
Packaging Configuration	36pcs/Pallet, 936pcs/40HQ Container

ELECTRICAL PARAMETERS AT STC

TYPE	JAM54D40 -410/GB	JAM54D40 -415/GB	JAM54D40 -420/GB	JAM54D40 -425/GB	JAM54D40 -430/GB	JAM54D40 -435/GB
Rated Maximum Power(Pmax) [W]	410	415	420	425	430	435
Open Circuit Voltage(Voc) [V]	37.82	37.92	38.05	38.20	38.32	38.45
Maximum Power Voltage(Vmp) [V]	31.37	31.59	31.80	32.01	32.21	32.42
Short Circuit Current(Isc) [A]	13.95	14.02	14.09	14.16	14.23	14.30
Maximum Power Current(Imp) [A]	13.07	13.14	13.21	13.28	13.35	13.42
Module Efficiency [%]	21.0	21.3	21.5	21.8	22.0	22.3
Power Tolerance	0~+5W					
Temperature Coefficient of Isc(α_Isc)	+0.046%/°C					
Temperature Coefficient of Voc(β_Voc)	-0.260%/°C					
Temperature Coefficient of Pmax(γ_Pmp)	-0.300%/°C					
STC	Irradiance 1000W/m², cell temperature 25°C, AM1.5G					

Remark: Electrical data in this catalog do not refer to a single module and they are not part of the offer.They only serve for comparison among different module types.

ELECTRICAL CHARACTERISTICS WITH 10% SOLAR IRRADIATION RATIO

TYPE	JAM54D40 -410/GB	JAM54D40 -415/GB	JAM54D40 -420/GB	JAM54D40 -425/GB	JAM54D40 -430/GB	JAM54D40 -435/GB
Rated Max Power(Pmax) [W]	443	448	454	459	464	470
Open Circuit Voltage(Voc) [V]	37.85	37.95	38.08	38.23	38.35	38.48
Max Power Voltage(Vmp) [V]	31.37	31.58	31.79	32.00	32.21	32.41
Short Circuit Current(Isc) [A]	15.07	15.14	15.22	15.29	15.37	15.44
Max Power Current(Imp) [A]	14.12	14.19	14.27	14.34	14.42	14.49
Irradiation Ratio (rear/front)	10%					

*Bifaciality=Pmax,rear/Rated Pmax,front

OPERATING CONDITIONS

Maximum System Voltage	1500V DC
Operating Temperature	-40°C~+85°C
Maximum Series Fuse Rating	30A
Maximum Static Load,Front Maximum Static Load,Back	3600Pa(75 lb/ft²) 2400Pa(50 lb/ft²)
NOCT	45±2°C
Bifaciality*	80%±10%
Fire Performance	UL Type 29

CHARACTERISTICS

Current-Voltage Curve JAM54D40-425/GB

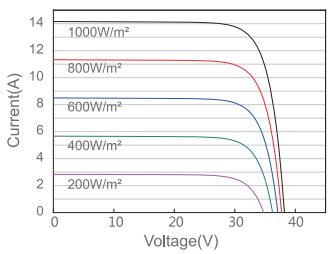

Power-Voltage Curve JAM54D40-425/GB

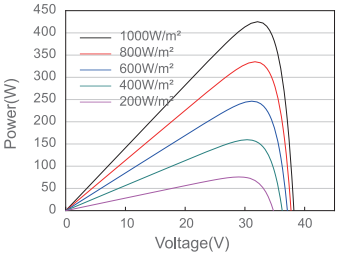
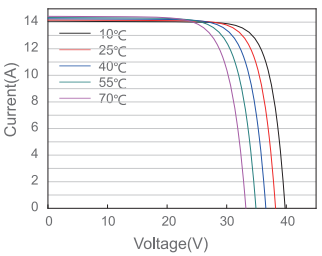
Current-Voltage Curve JAM54D40-425/GB